3/4 Hp Fixed Speed Submersible Turbine Pumps

Marketers concerned about fueling times, efficiency, serviceability, reliability and overall quality find it an easy choice to specify FE Petro™ brand submersible turbine pumps (STPs). An STP has to be reliable, it has to be safe, and it has to perform. That's why thousands of station owners around the world have trusted FE Petro™ STPs and the Franklin Electric motors that drive them to keep their business flowing for over 25 years. With best-in-class flow rates and backed by a long history of dependability FE Petro™ STPs simply do their job without fail, delivering fuel to customers day after day without a hitch.

Highlights

Active Air Eliminator

FE Petro™ brand STPs come standard with active air elimination, which eliminates air through the highest point in the pump head at all times when the pump is running, assuring air does not pass into discharge piping.

Safety and Ease of Maintenance

FE Petro™ brand STPs include a contractor electrical disconnect, which requires loosening only one bolt, allowing motor wiring to be disconnected without venting the dangerous tank vapors into the sump when servicing FE Petro™ submersible products.

Simple Servicing

If ever required, the pump can be easily removed from the tank by unthreading three bolts. There is no need to disconnect the syphon system or to remove the leak detector from the system to service the STP.

Manual Pressure Relief

As a standard FE Petro™ feature a vent screw is provided to bleed line pressure to zero when necessary. By turning this screw, product is diverted back to the tank, dropping line pressure to zero. This reduces fuel discharged into the sump manhole or dispenser pan during servicing, further protecting service technicians and the environment.

Reliable Check Valve

The STP uses the proven FE Petro™ line check valve. At 70mm in diameter, this valve reduces pressure loss at high flow rates resulting in faster fueling times. FE Petro™ line check valves are offered in multiple configurations to best suit your line leak application.

Variable Length

The VL2 pump fits 94% of all known tank diameters and tank bury depth combinations. The VL1 and VL3 are available to handle installations shorter or longer than this range. The telescoping connection is a patented FE Petro feature. Pump length can be set by making one simple measurement and setting the pump length without affecting the UL listing.

Outlast, Outperform with Franklin Electric Inside

FE Petro™ STPs are powered by the legendary Franklin Electric motor and built for long term performance. Franklin Electric-powered submersible pumps provide maximum uptime and a proven track record in the fueling industry that spans more than four decades. They feature best-in-class flow rates and a long history of dependability.

Specifications

Specifications

- 3/4 hp fixed speed models are available in variable and fixed length options.
- Check valve: 70 mm diameter fluorocarbon seal constructed on cast aluminium body and steel backing washer.
- Pressure relief valve: available in four pressure relief settings, integral to check valve. Standard model relieves at 2.76 bar and resets above 2.41 bar.
- Syphon: venturi-type syphon primer supplied with every submersible. Syphon check valve and secondary syphon sold separately.
- Air eliminator: every submersible includes a tank return path with one-way check valve to provide active air elimination.
- Electrical disconnect: electrical yoke for positive contractor disconnect during service.

Pump Motor

- 3/4 hp fixed speed, 2875 rpm, multi-stage centrifugal type pump motor with integral, automatic, thermal overload protection.

Power Requirements

- 75B models require single-phase, 200-250 VAC, 50 Hz incoming power.
- 75B models incorporate a starting and running capacitor, with internal bleed resistor, rated 440 Volt, 15 microfarad.
- STP-SCI single-phase smart controllers and STP-CBBS single-phase control boxes are available for 75B control.
- 75C models require three-phase, 380-415 VAC, 50 Hz incoming power.
- STP-SCIIIC three-phase smart controllers available for 75C control.

Liquid Compatibility

- Max. liquid viscosity: 70 SSU at 60°F (15°C).
- Standard models are listed for fuel mixtures containing up to 10% ethanol with gasoline, and 20% MTBE, 20% ETBE or 17% TAME with gasoline.
- STPAG models are compatible with fuel mixtures containing diesel fuel with up to 20% biodiesel, 100% biodiesel, up to 85% ethanol with gasoline, and 20% MTBE, 20% ETBE or 17% TAME with gasoline.
- 3/4 hp fixed speed models can also be used with diesel fuels, fuel oils, kerosene, Avgas and jet fuels in a non-gelled pourable state.
- All wetted elastomers are made of a high grade, fluorocarbon compound.

Approvals/Certifications

- Consult factory for applicable approvals.

Quality Certification

- Franklin Fueling Systems is an ISO 9001Certified Manufacturer.

3/4 hp Fixed Speed Turbine Performance Chart

(STP75B)

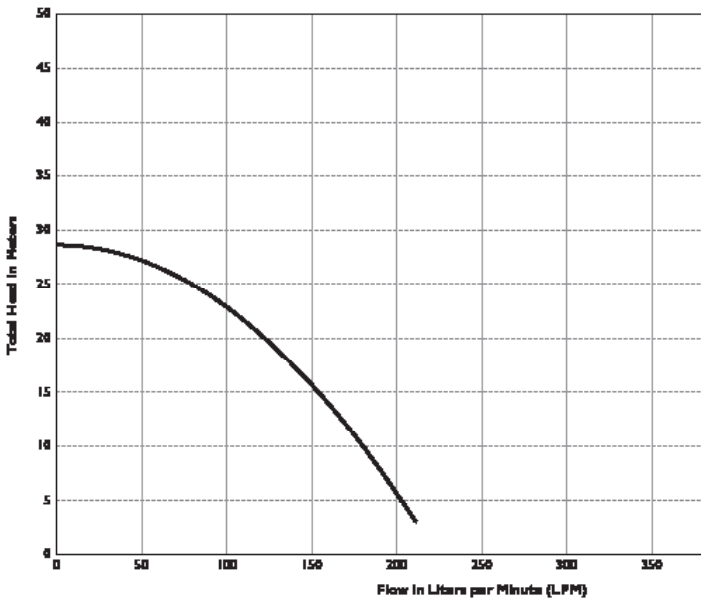

Note: Performance based on pumping solvent (0.78 specific gravity). Pressure is taken at the manifold discharge outlet. Fixed Speed 0.75 HP was powered by Single-Phase, 50 Hz, 250 Volt incoming supply.

(STP75C)

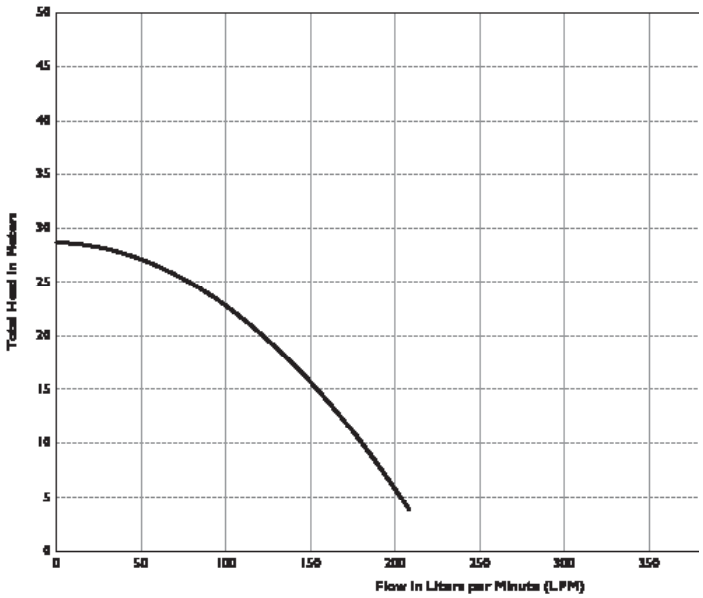

Note: Performance based on pumping solvent (0.78 specific gravity). Pressure is taken at the manifold discharge outlet. Fixed Speed 0.75 HP was powered by Three-Phase, 50 Hz, 415 Volt incoming supply.

Order Information

3/4 hp Fixed Speed Submersible Turbine Pump Model Designation System

A typical turbine model designation has up to five components to define the pump being supplied as follows:

STP XXXXX Y - A - B

- STP = Basic Model Designation
- XXXXX = Factory Installed Options
  - STP model designations may include one or more of the following characters in alphabetical order:
  - AG = Alcohol-gasoline compatible (up to 85% ethanol, up to 20% biodiesel, or 100% biodiesel). Note: Standard models up to 10% ethanol capable.
  - F = Floating suction adapter (1½" NPT female adapter)
  - K = Intake filter screen (IFS, factory installed to PMA)
  - *R = Model R check valve (1.65 bar relief/1.52 bar reset for PLLD)
  - *W = Model W check valve (1.10 bar relief/ 0.89 bar reset for PPM4000)

**Note: If not otherwise specified, all STP models supplied with standard model check valve (2.76 bar relief/2.41 bar reset for MLD, TS-LS300 and TS-LS500).*

- Y = Pump Motor Horsepower Rating
  - 75B = 3/4 hp fixed speed, single-phase
  - 75C = 3/4hp fixed speed, three-phase
- A = Model Length**
  - VL1 = Variable length range #1.
  - VL2 = Variable length range #2.
  - VL3 = Variable length range #3.

Note: VL2 models fit 94% of all known installations.

- B = Riser Pipe Length
  - Riser pipe length is expressed as two numeric characters that indicate the total length of the riser in inches. Riser pipes are available from 178mm-1753mm in 25.4mm increments (additional charge for risers 787mm or longer).

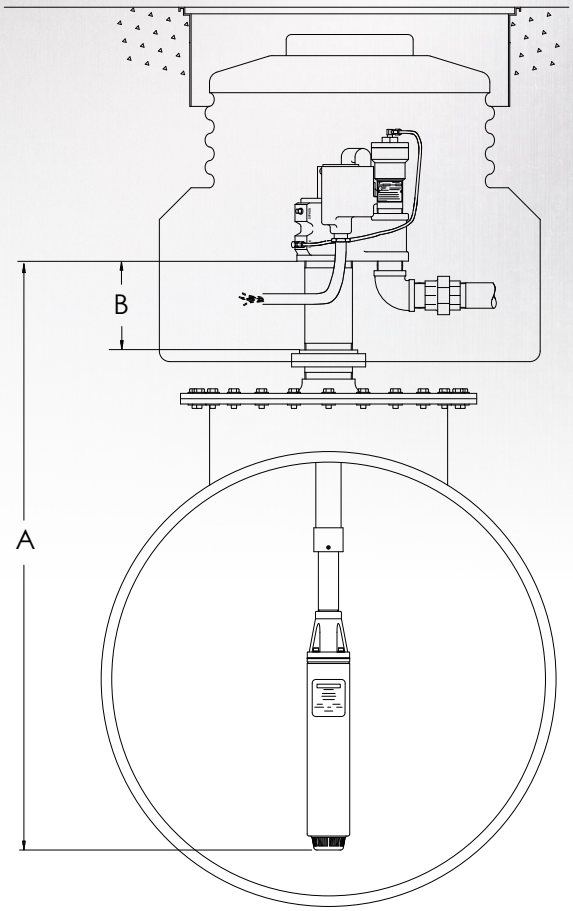

Model Length (A)

STP Horsepower	Model Length Range	Model Length Designation
75B	1499mm-2241mm	VL1
	2286mm-3848mm	VL2
	3099mm-5441mm	VL3
75C	1480mm-2222mm	VL1
	2267mm-3829mm	VL2
	3080mm-5422mm	VL3

Ordering Information continued

Standard 3/4 Hp Fixed Speed Submersible Turbine Pumps

Model	Description	Model Length Range Number	Model Length Range*
STP75B-VL1	3/4 hp fixed speed, single-phase	VL1	1499mm-2241mm
STP75B-VL2	3/4 hp fixed speed, single-phase	VL2	2286mm-3848mm
STP75B-VL3	3/4 hp fixed speed, single-phase	VL3	3099mm-5441mm
STP75C-VL1	3/4 hp fixed speed, three-phase	VL1	1480mm-2222mm
STP75C-VL2	3/4 hp fixed speed, three-phase	VL2	2267mm-3829mm
STP75C-VL3	3/4 hp fixed speed, three-phase	VL3	3080mm-5422mm

Alcohol-Gas (AG) 3/4 Hp Fixed Speed Submersible Turbine Pumps

Model	Description	Model Length Range Number	Model Length Range*
STPAG75B-VL1	3/4 hp AG fixed speed, single-phase	VL1	1499mm-2241mm
STPAG75B-VL2	3/4 hp AG fixed speed, single-phase	VL2	2286mm-3848mm
STPAG75B-VL3	3/4 hp AG fixed speed, single-phase	VL3	3099mm-5441mm
STPAG75C-VL1	3/4 hp AG fixed speed, three-phase	VL1	1480mm-2222mm
STPAG75C-VL2	3/4 hp AG fixed speed, three-phase	VL2	2267mm-3829mm
STPAG75C-VL3	3/4 hp AG fixed speed, three-phase	VL3	3080mm-5422mm

Notes:

1. *STP models are compatible with fuel mixtures containing up to 10% ethanol with gasoline, diesel fuel, 20% MTBE, 20% ETBE or 17% TAME with gasoline. STPAG models are compatible with fuel mixtures containing diesel fuel with up to 20% biodiesel, 100% biodiesel, up to 85% ethanol with gasoline, and 20% MTBE, 20% ETBE or 17% TAME with gasoline.*
2. *All models are supplied with a standard check valve unless factory option "R" or "W" is specified.*
3. *4" riser pipe, if supplied locally, must be 4½" OD by 3/16" WT tubing.*
4. *75B models require single-phase, 200-250 VAC, 50 Hz power. 75C models require three-phase, 380-415 VAC, 50 Hz power.*
5. *For riser pipe lengths 787mm to 1753mm, additional charge applies.*

**Model length (A) defined as the dimension from turbine manifold bottom to pump motor inlet.*

Factory Installed Approvals

May specify one in model number at time of STP order.

Model	Description
(ATXF)	Submersible Turbine Pumps with ATEX Flameproof approval for EN markets
(RT)	Submersible Turbine Pumps with ROSTEST approval for Eastern European markets

Note: If not otherwise specified, all models are supplied to UL approval as standard.

Consult Factory for other local approvals.

Factory Installed Options

Specified in model number at time of STP order.

Model	Description
F	Floating suction adapter, 1½" NPT female, must be factory installed
K	IFS (intake filter screen) factory assembled to pump motor assembly
R	Model R check valve, factory installed, for Veeder-Root™ PLLD Line Leak
W	Model W check valve, factory installed, for Red Jacket™ PPM4000 Line Leak

Veeder-Root is a trademark of Danaher Corporation
Red Jacket is a trademark of Veeder-Root Company

Ordering Information continued

Field Installed Options

3/4 Hp fixed speed specific accessories.

Model	Description
400137937	Syphon check valve, alcohol-gasoline compatible
5800100215	STP-SCI, single-phase smart controller
400818922	STP-CBBS, single-phase control box with lockout switch, 240 Volt coil
402312922	STP-DHIB-SCI, combo DHIB with factory wired STP-SCI
402313922	STP-DHIB-CBBS, combo DHIB with factory wired STP-CBBS
402459931	Model 65 PSI (4.5 bar) relief check valve (for slave of manifolded STPs with Veeder Root (*) PLLD)
402507930	Secondary syphon kit (when two syphon primes are required for one STP)
5800103300	STP-SCIIIC, three phase 380-415 VAC smart controller
401220965	STP-CBB3C, three-phase 380-415 VAC magnetic starter
5800300200	STP-DHIB, dispenser hook isolation for 240 Volt dispenser handle switches, up to eight each

FE PETRO®
A Franklin Fueling Systems Brand
franklinfueling.com
3760 Marsh Rd. • Madison, WI 53718, USA
Tel: +1 608 838 8786 • Fax: +1 608 838 6433
Tel: USA & Canada +1 800 225 9787 • Tel: UK +44 (0)1473 243300
Tel: Mex 001 800 738 7610 • Tel: FR +33 (0)1 69 21 41 41 • Tel: CH +86 10 8565 4566

PEI MEMBER apea working for a safer environment

Veeder-Root™ is a trademark of the Danaher Corporation.